REV.	DESCRIPTION	DATE
A	New Drawing	2023/01/13

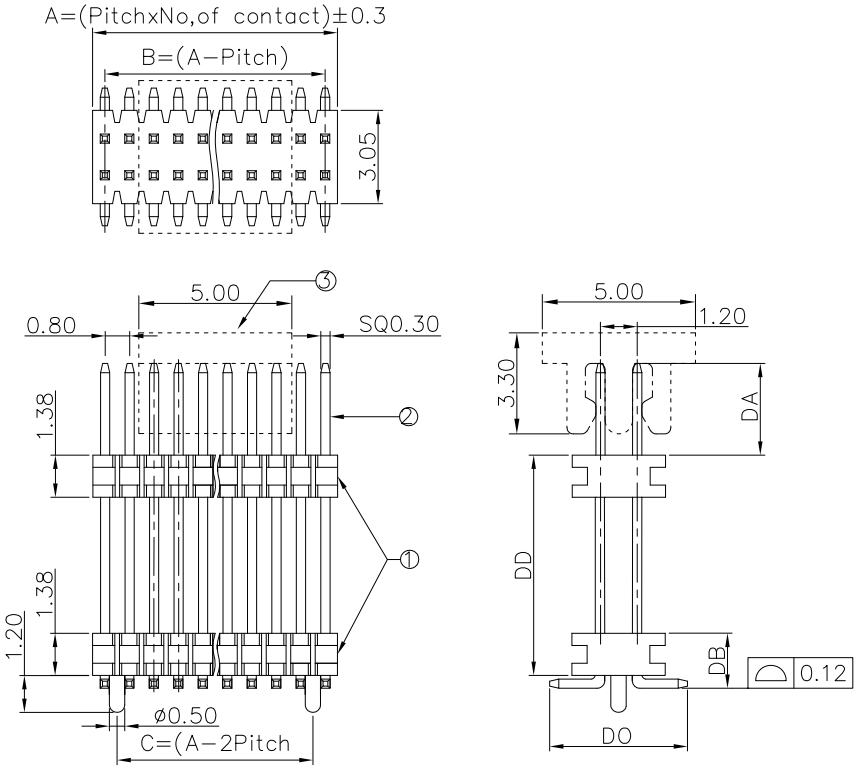

LTR	Part Name	Material	Description	QTY
1	Housing	Nylon UL94V-0	260°C for 10 Seconds . Initial : 1000M Ohms Min. After Test : 500M Ohms Min.	2
2	Contact	Brass	Current Rating : 0.75A Initial : 20m Ohms Max. After Test : 40m Ohms Max.	XX
3	Cap	Nylon UL94V-0	260°C for 10 Seconds .	1
Temperature Rating : -40°C ~ +125°C . Dielectric Withstanding Voltage : 1000V AC/Min				

P H A D - S D X X X G 1 A B W N X - B X X X

- **PCB Contact Type**: S — SMT
- **Plastic Base**: D — Double Base
- **Number of Contact**: 04 to 100contacts
- **Contact Plating**: G1 Gold Flash
- **Base**:

Type	H x W (mm)
A	1.38 x 3.05

- **Base Color**: B — Black
- **With locating Peg**: W — With locating Peg
- **Plastic**: N — NY-6T
- **Packing**:

E	Reel+Cap
G	Box
C	Tube

- **Series No**: BXXX

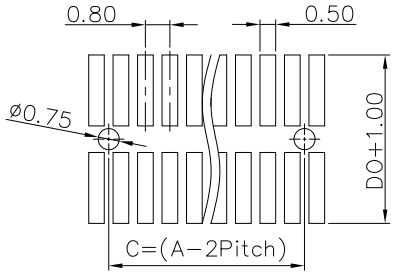

P.C.B LAYOUT

RoHS compliant

竣豪電子股份有限公司 **Superior Tech Co., Ltd.**			General Tolerance	TITLE	0.8 Pin Header Dual Row SMT Type Base H=1.38
			X. ± 0.5	DRAWN Jacky	DATE 01-13-23' / NO. 002
			.X ± 0.3		
			.XX ± 0.2	CHECK Tom	DATE 01-13-23' / PART NO. PHAD-SDXXXG1ABWNX-BXXX
			.XXX ± 0.1	APPROVED Tom	DATE 01-13-23' / CUSTOMER NO.
REV. A	UNIT mm	SCALE 1:1	角度 ± 5°		

(Q2-R03-01A) ST-R05-07